Electrolux PROFESSIONAL

Handling System Sorting Table Right to Left, 2200x1100mm

ITEM #

MODEL #

NAME #

SIS #

AIA #

865344 (BHST2211R) Sorting table, Right>Left, 2200x1100 mm

Short Form Specification

Item No.

Constructed in 304 AISI stainless steel. N. 4 square 40x40mm square legs on height-adjustable feet. Underframe on three sides.
1-tier overshelf for baskets. N. 1 waste scraping hole with rubber ring. Attachment to infill tops or slide conveyors on the left side. Basket direction: from right to left.

APPROVAL:

Construction

- All surfaces smooth with polished finish.
- Receiving tabletop with raised side edges all-round, reduces the possibility of crockery being pushed off the table.
- Constructed in AISI 304 stainless steel with square 40x40mm legs.
- Sorting table provided with an over-shelf for dishwashing racks which can be inclined at either the dishwashing or receiving side.
- One or two waste holes with a rubber scraping ring tabletop.

Sustainability

- Optional extras: plain tray slider, cutlery chute or additional scraping hole.

Optional Accessories

- Dish scraper PNC 855297 ❑
- Shelf for Plates and baskets, 2200 mm PNC 865377 ❑
- Tray slide for sorting table, 2200 mm PNC 865381 ❑
- Cutlery chute to install on tray slide PNC 865383 ❑
- Floor fastening kit for 2 square legs PNC 865386 ❑
- Removable bridge table, 800 mm PNC 865418 ❑
- Removable bridge table with hole, 800 mm PNC 865419 ❑

Handling System
Sorting Table Right to Left, 2200x1100mm

Key Information:

External dimensions, Width:	
865344 (BHST2211R)	2200 mm
External dimensions, Depth:	1100 mm
External dimensions, Height:	1551 mm
Net weight:	19 kg

Front

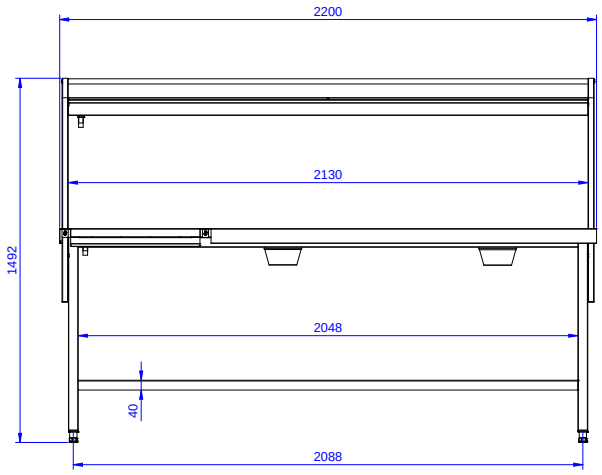

Side

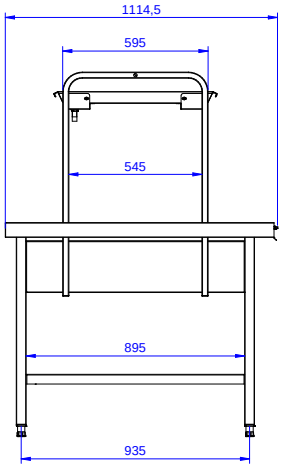

Top

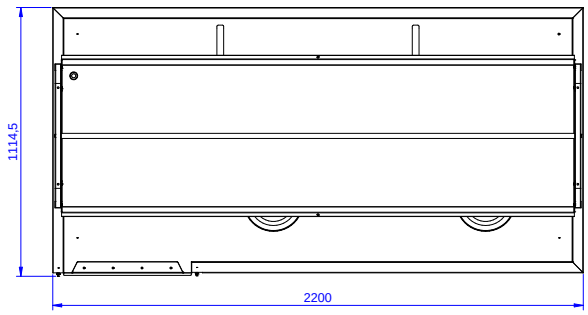

The company reserves the right to make modifications to the products without prior notice. All information correct at time of printing.

2024.10.09